Revisions note				
Number	Change order	Change	Designed by	Date
1	462	Two holes takes away.	HK	071106

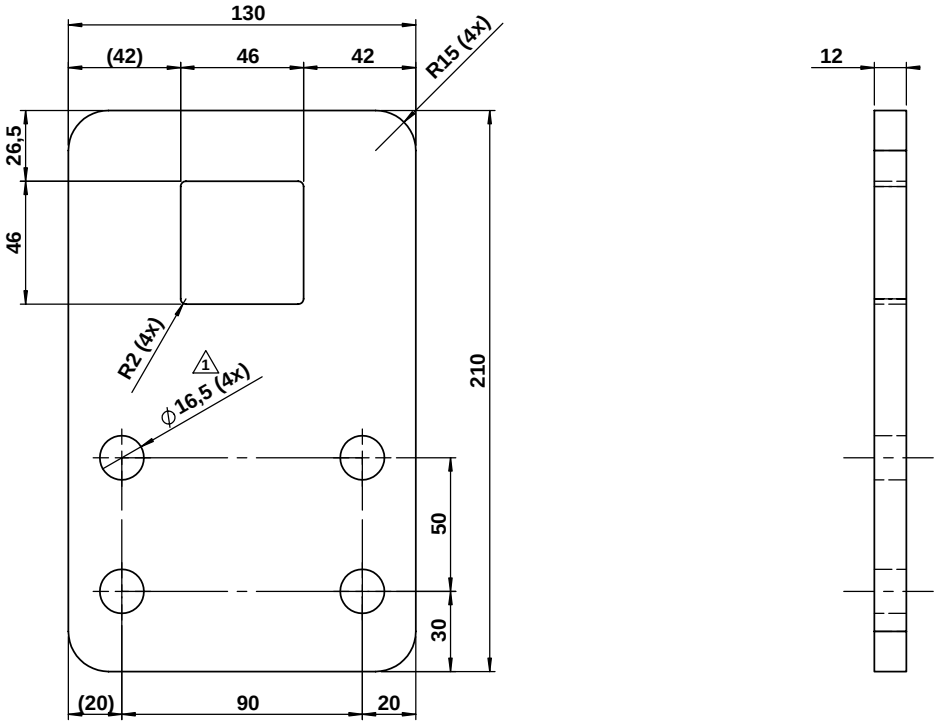

Monoflex	Projection method	Material: 210x130x12 Weight: 2,271 kg Mat.std.: St 37	
General tolerance SS-ISO 2768-1 Middle	Area A4	Drawing name: Bracket Car: Article No: 50.60,50.63	
Checked by:	Designed: HK Date: 070806	Drawing No: HKS 2061	Scale
dxf/hks/hks 2061-1/071102	Filename: f:/sw/gd/hks/		